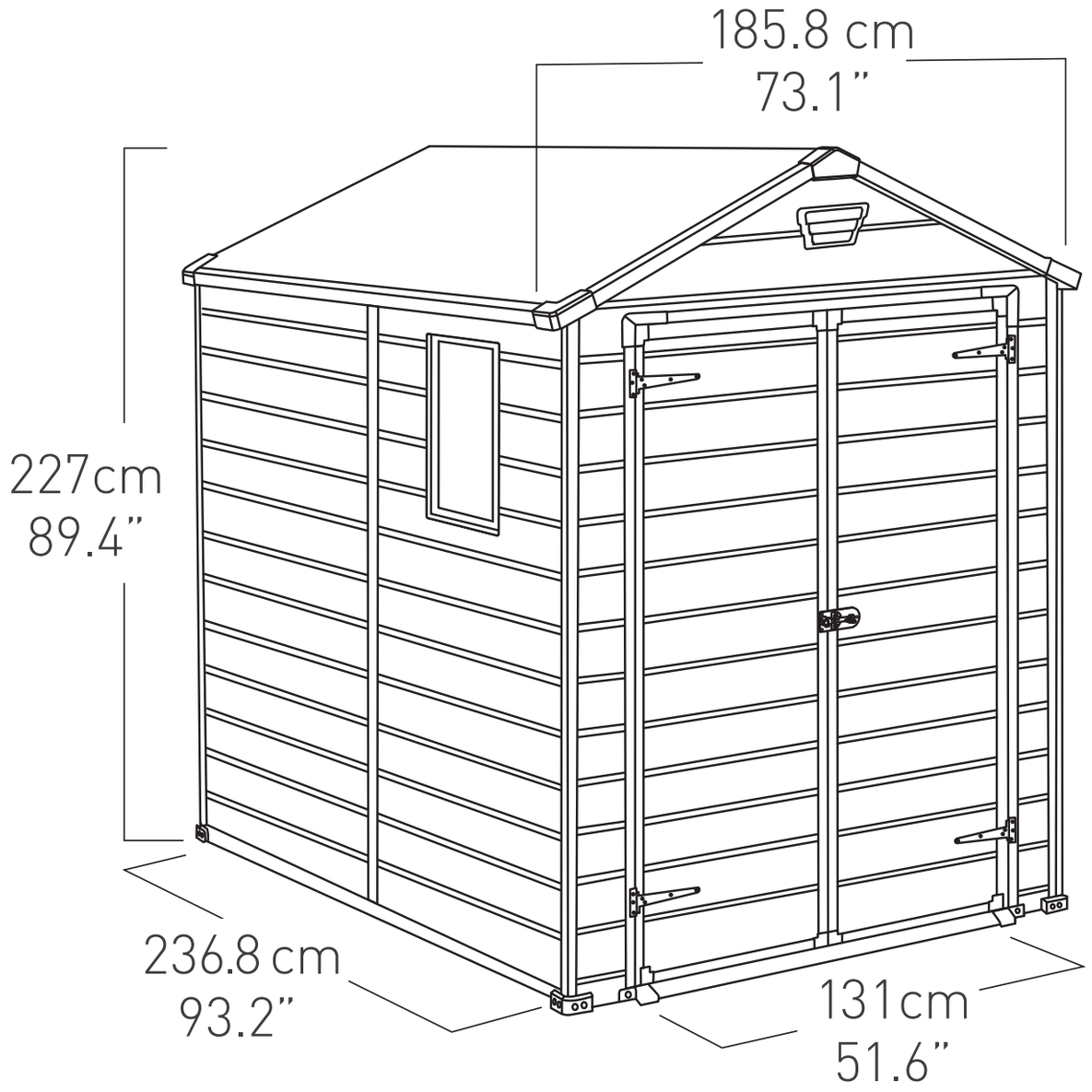


# MANOR 6x8DD

Art# 17196659, 17197129

All dimensions are approximate and refer to the maximum external measurements